Electrolux PROFESSIONAL

SkyLine ProS
LPG Gas Combi Oven 6GN1/1

ITEM #

MODEL #

NAME #

SIS #

AIA #

217660 (ECOG61K2H0)

SkyLine ProS Combi Boilerless Oven with touch screen control, 6x1/1GN, gas, 2 cooking modes (recipe program, manual), automatic cleaning, LPG

Short Form Specification

Item No.

Combi oven with high resolution full touch screen interface, multilanguage.
- Boilerless steaming function to add and retain moisture.
- OptiFlow air distribution system to achieve maximum performance with 7 fan speed levels.
- SkyClean: Automatic and built-in self cleaning system. 5 automatic cycles (soft, medium, strong, extra strong, rinse-only) and green functions to save energy, water, detergent and rinse aid.
- Cooking modes: Programs (a maximum of 1000 recipes can be stored and organized in 16 different categories); Manual; EcoDelta cooking cycle.
- Special functions: MultiTimer cooking, Plan-n-Save to cut running costs, Make-it-Mine to customize interface, SkyHub to customize homepage, agenda MyPlanner, automatic backup mode to avoid downtime.
- USB port to download HACCP data, programs and settings. Connectivity ready.
- Single sensor core temperature probe.
- Double-glass door with LED lights.
- Stainless steel construction throughout.
- Supplied with n.1 tray rack 1/1 GN, 67 mm pitch.

APPROVAL:

Main Features

- Boilerless steaming function to add and retain moisture for high quality, consistent cooking results.
- Dry hot convection cycle (max 300 °C) ideal for low humidity cooking. Automatic moistener (11 settings) for boiler-less steam generation.
- EcoDelta cooking: cooking with food probe maintaining preset temperature difference between the core of the food and the cooking chamber.
- Programs mode: a maximum of 1000 recipes can be stored in the oven's memory, to recreate the exact same recipe at any time. The recipes can be group in 16 different categories to better organize the menu. 16-step cooking programs also available.
- MultiTimer function to manage up to 20 different cooking cycles at the same time, improving flexibility and ensuring excellent cooking results. Can be saved up to 200 MultiTimer programs.
- Fan with 7 speed levels from 300 to 1500 RPM and reverse rotation for optimal evenness. Fan stops in less than 5 seconds when door is opened.
- Single sensor core temperature probe included.
- Pictures upload for full customization of cooking cycles.
- Automatic fast cool down and pre-heat function.
- Different chemical options available: solid (phosphate-free), liquid (requires optional accessory).
- GreaseOut: predisposed for integrated grease drain and collection for safer operation (dedicated base as optional accessory).
- USB port to download HACCP data, share cooking programs and configurations.
  USB port also allows to plug-in sous-vide probe (optional accessory).
- Back-up mode with self-diagnosis is automatically activated if a failure occurs to avoid downtime.
- Capacity: 6 GN 1/1 trays.
- OptiFlow air distribution system to achieve maximum performance in chilling/heating eveness and temperature control thanks to a special design of the chamber.

Construction

- Double thermo-glazed door with open frame construction, for cool outside door panel. Swing hinged easy-release inner glass on door for easy cleaning.
- Hygienic internal chamber with all rounded corners for easy cleaning.
- 304 AISI stainless steel construction throughout.
- Front access to control board for easy service.
- IPX 5 spray water protection certification for easy cleaning.
- Supplied with n.1 tray rack 1/1 GN, 67 mm pitch.

User Interface & Data Management

- High resolution full touch screen interface (translated in more than 30 languages) - color-blind friendly panel.
- Make-it-mine feature to allow full personalization or locking of the user interface.

- SkyHub lets the user group the favorite functions in the homepage for immediate access.
- MyPlanner works as an agenda where the user can plan the daily work and receive personalized alerts for each task.
- Connectivity ready for real time access to connected appliances from remote and HACCP monitoring (requires optional accessory).
- Trainings and guidances supporting materials easily accessible by scanning QR-Code with any mobile device.
- Automatic consumption visualization at the end of the cycle.
- Connectivity ready for real time access to connected appliances from remote and data monitoring (requires optional accessory – contact the Company for more details).

Sustainability

- Human centered design with 4-star certification for ergonomics and usability.
- Wing-shaped handle with ergonomic design and hands-free opening with the elbow, making managing trays simpler. Protected by registered design (EM003143551 and related family).
- Reduced power function for customized slow cooking cycles.
- SkyClean: Automatic and built-in self cleaning system. 5 automatic cycles (soft, medium, strong, extra strong, rinse-only) and green functions to save energy, water, detergent and rinse aid. Also programmable with delayed start.
- Plan-n-Save function organizes the cooking sequence of the chosen cycles optimizing the work in the kitchen from a time and energy efficiency point of view.

Included Accessories

• 1 of Chimney adaptor needed in case of conversion of 6 GN 1/1 or 6 GN 2/1 ovens from natural gas to LPG	PNC 922706	

Optional Accessories

• Water softener with cartridge and flow meter (high steam usage)	PNC 920003	❑
• Water filter with cartridge and flow meter for 6 & 10 GN 1/1 ovens (low-medium steam usage - less than 2hrs per day full steam)	PNC 920004	❑
• Water softener with salt for ovens with automatic regeneration of resin	PNC 921305	❑
• Wheel kit for 6 & 10 GN 1/1 and 2/1 GN oven base (not for the disassembled one)	PNC 922003	❑
• Pair of AISI 304 stainless steel grids, GN 1/1	PNC 922017	❑
• Pair of grids for whole chicken (8 per grid - 1,2kg each), GN 1/1	PNC 922036	❑
• AISI 304 stainless steel grid, GN 1/1	PNC 922062	❑
• Grid for whole chicken (4 per grid - 1,2kg each), GN 1/2	PNC 922086	❑
• External side spray unit (needs to be mounted outside and includes support to be mounted on the oven)	PNC 922171	❑
• Baking tray for 5 baguettes in perforated aluminum with silicon coating, 400x600x38mm	PNC 922189	❑
• Baking tray with 4 edges in perforated aluminum, 400x600x20mm	PNC 922190	❑
• Baking tray with 4 edges in aluminum, 400x600x20mm	PNC 922191	❑
• Pair of frying baskets	PNC 922239	❑
• AISI 304 stainless steel bakery/pastry grid 400x600mm	PNC 922264	❑
• Double-step door opening kit	PNC 922265	❑
• Grid for whole chicken (8 per grid - 1,2kg each), GN 1/1	PNC 922266	❑
• USB probe for sous-vide cooking	PNC 922281	❑
• Grease collection tray, GN 1/1, H=100 mm	PNC 922321	❑
• Kit universal skewer rack and 4 long skewers for Lenghtwise ovens	PNC 922324	❑
• Universal skewer rack	PNC 922326	❑
• 4 long skewers	PNC 922327	❑
• Volcano Smoker for lengthwise and crosswise oven	PNC 922338	❑
• Multipurpose hook	PNC 922348	❑
• 4 flanged feet for 6 & 10 GN , 2", 100-130mm	PNC 922351	❑
• Grid for whole duck (8 per grid - 1,8kg each), GN 1/1	PNC 922362	❑
• Tray support for 6 & 10 GN 1/1 disassembled open base	PNC 922382	❑
• Wall mounted detergent tank holder	PNC 922386	❑
• USB single point probe	PNC 922390	❑
• IoT module for OnE Connected and SkyDuo (one IoT board per appliance - to connect oven to blast chiller for Cook&Chill process).	PNC 922421	❑
• Tray rack with wheels, 6 GN 1/1, 65mm pitch	PNC 922600	❑
• Tray rack with wheels, 5 GN 1/1, 80mm pitch	PNC 922606	❑
• Bakery/pastry tray rack with wheels 400x600mm for 6 GN 1/1 oven and blast chiller freezer, 80mm pitch (5 runners)	PNC 922607	❑
• Slide-in rack with handle for 6 & 10 GN 1/1 oven	PNC 922610	❑
• Open base with tray support for 6 & 10 GN 1/1 oven	PNC 922612	❑
• Cupboard base with tray support for 6 & 10 GN 1/1 oven	PNC 922614	❑
• Hot cupboard base with tray support for 6 & 10 GN 1/1 oven holding GN 1/1 or 400x600mm trays	PNC 922615	❑
• External connection kit for liquid detergent and rinse aid	PNC 922618	❑
• Grease collection kit for GN 1/1-2/1 cupboard base (trolley with 2 tanks, open/close device for drain)	PNC 922619	❑
• Stacking kit for 6 GN 1/1 oven placed on gas 6 GN 1/1 oven	PNC 922622	❑
• Stacking kit for 6 GN 1/1 oven placed on gas 10 GN 1/1 oven	PNC 922623	❑
• Trolley for slide-in rack for 6 & 10 GN 1/1 oven and blast chiller freezer	PNC 922626	❑
• Trolley for mobile rack for 2 stacked 6 GN 1/1 ovens on riser	PNC 922628	❑
• Trolley for mobile rack for 6 GN 1/1 on 6 or 10 GN 1/1 ovens	PNC 922630	❑
• Riser on feet for 2 6 GN 1/1 ovens or a 6 GN 1/1 oven on base	PNC 922632	❑
• Riser on wheels for stacked 2x6 GN 1/1 ovens, height 250mm	PNC 922635	❑

The company reserves the right to make modifications to the products without prior notice. All information correct at time of printing.

2024.10.08

- Stainless steel drain kit for 6 & 10 GN oven, dia=50mm — PNC 922636 ❑
- Plastic drain kit for 6 &10 GN oven, dia=50mm — PNC 922637 ❑
- Grease collection kit for GN 1/1-2/1 open base (2 tanks, open/close device for drain) — PNC 922639 ❑
- Wall support for 6 GN 1/1 oven — PNC 922643 ❑
- Dehydration tray, GN 1/1, H=20mm — PNC 922651 ❑
- Flat dehydration tray, GN 1/1 — PNC 922652 ❑
- Open base for 6 & 10 GN 1/1 oven, disassembled - NO accessory can be fitted with the exception of 922382 — PNC 922653 ❑
- Bakery/pastry rack kit for 6 GN 1/1 oven with 5 racks 400x600mm and 80mm pitch — PNC 922655 ❑
- Stacking kit for 6 GN 1/1 combi oven on 15&25kg blast chiller/freezer crosswise — PNC 922657 ❑
- Heat shield for stacked ovens 6 GN 1/1 on 6 GN 1/1 — PNC 922660 ❑
- Heat shield for stacked ovens 6 GN 1/1 on 10 GN 1/1 — PNC 922661 ❑
- Heat shield for 6 GN 1/1 oven — PNC 922662 ❑
- Kit to convert from natural gas to LPG — PNC 922670 ❑
- Kit to convert from LPG to natural gas — PNC 922671 ❑
- Flue condenser for gas oven — PNC 922678 ❑
- Fixed tray rack for 6 GN 1/1 and 400x600mm grids — PNC 922684 ❑
- Kit to fix oven to the wall — PNC 922687 ❑
- Tray support for 6 & 10 GN 1/1 oven base — PNC 922690 ❑
- 4 adjustable feet with black cover for 6 & 10 GN ovens, 100-115mm — PNC 922693 ❑
- Detergent tank holder for open base — PNC 922699 ❑
- Bakery/pastry runners 400x600mm for 6 & 10 GN 1/1 oven base — PNC 922702 ❑
- Wheels for stacked ovens — PNC 922704 ❑
- Chimney adaptor needed in case of conversion of 6 GN 1/1 or 6 GN 2/1 ovens from natural gas to LPG — PNC 922706 ❑
- Mesh grilling grid, GN 1/1 — PNC 922713 ❑
- Probe holder for liquids — PNC 922714 ❑
- Exhaust hood with fan for 6 & 10 GN 1/1 ovens — PNC 922728 ❑
- Exhaust hood with fan for stacking 6+6 or 6+10 GN 1/1 ovens — PNC 922732 ❑
- Exhaust hood without fan for 6&10 1/1GN ovens — PNC 922733 ❑
- Exhaust hood without fan for stacking 6+6 or 6+10 GN 1/1 ovens — PNC 922737 ❑
- Fixed tray rack, 5 GN 1/1, 85mm pitch — PNC 922740 ❑
- 4 high adjustable feet for 6 & 10 GN ovens, 230-290mm — PNC 922745 ❑
- Tray for traditional static cooking, H=100mm — PNC 922746 ❑
- Double-face griddle, one side ribbed and one side smooth, 400x600mm — PNC 922747 ❑
- Trolley for grease collection kit — PNC 922752 ❑
- Water inlet pressure reducer — PNC 922773 ❑
- Extension for condensation tube, 37cm — PNC 922776 ❑
- Non-stick universal pan, GN 1/1, H=20mm — PNC 925000 ❑
- Non-stick universal pan, GN 1/ 1, H=40mm — PNC 925001 ❑
- Non-stick universal pan, GN 1/1, H=60mm — PNC 925002 ❑
- Double-face griddle, one side ribbed and one side smooth, GN 1/1 — PNC 925003 ❑
- Aluminum grill, GN 1/1 — PNC 925004 ❑
- Frying pan for 8 eggs, pancakes, hamburgers, GN 1/1 — PNC 925005 ❑
- Flat baking tray with 2 edges, GN 1/1 — PNC 925006 ❑
- Baking tray for 4 baguettes, GN 1/1 — PNC 925007 ❑
- Potato baker for 28 potatoes, GN 1/1 — PNC 925008 ❑
- Non-stick universal pan, GN 1/2, H=20mm — PNC 925009 ❑
- Non-stick universal pan, GN 1/2, H=40mm — PNC 925010 ❑
- Non-stick universal pan, GN 1/2, H=60mm — PNC 925011 ❑
- Compatibility kit for installation on previous base GN 1/1 — PNC 930217 ❑

Recommended Detergents

- C25 Rinse & Descale tab 2in1 rinse aid and descaler in disposable tablets for Skyline ovens Professional 2in1 rinse aid and descaler in disposable tablets for new generation ovens with automatic washing system. Suitable for all types of water. Packaging: 1 drum of 50 30g tablets. each — PNC 0S2394 ❑
- C22 Cleaning Tab Disposable detergent tablets for SkyLine ovens Professional detergent for new generation ovens with automatic washing system. Suitable for all types of water. Packaging: 1 drum of 100 65g tablets. each — PNC 0S2395 ❑

The company reserves the right to make modifications to the products without prior notice. All information correct at time of printing.

SkyLine ProS
LPG Gas Combi Oven 6GN1/1

Front

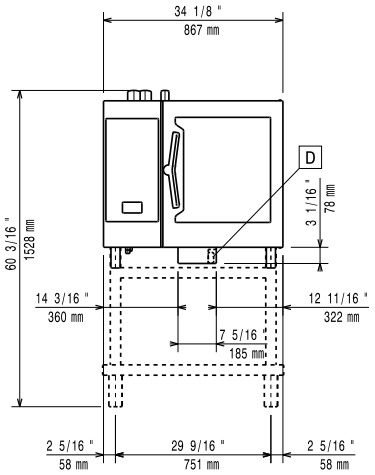

Side

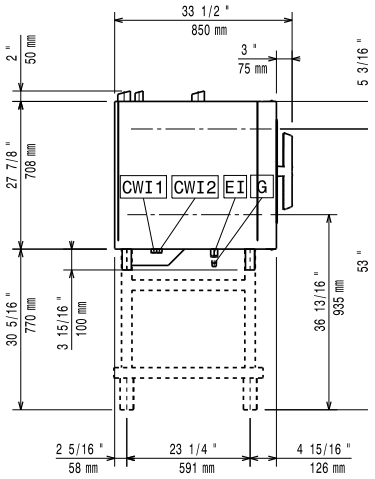

CWI1 = Cold Water inlet 1 (cleaning)
CWI2 = Cold Water Inlet 2 (steam generator)
D = Drain
DO = Overflow drain pipe
EI = Electrical inlet (power)
G = Gas connection

Top

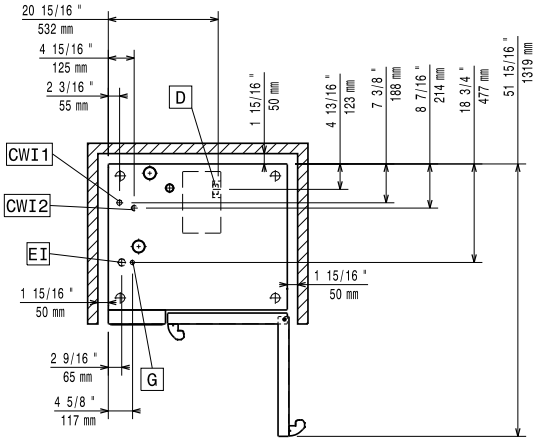

Electric

Supply voltage:	
217660 (ECOG61K2H0)	220-240 V/1 ph/50 Hz
Electrical power, default:	1.1 kW

Default power corresponds to factory test conditions. When supply voltage is declared as a range the test is performed at the average value. According to the country, the installed power may vary within the range.

Electrical power max.:	1.1 kW
Circuit breaker required	

Gas

Gas Power:	12 kW
Standard gas delivery:	LPG, G31
ISO 7/1 gas connection diameter:	1/2" MNPT
Total thermal load:	40908 BTU (12 kW)

Water:

Water inlet connections "CWI1-CWI2":	3/4"
Pressure, bar min/max:	1-6 bar
Drain "D":	50mm
Max inlet water supply temperature:	30 °C
Hardness:	5 °fH / 2.8 °dH
Chlorides:	<10 ppm
Conductivity:	>50 µS/cm

Electrolux Professional recommends the use of treated water, based on testing of specific water conditions.

Please refer to user manual for detailed water quality information.

Installation:

Clearance:	Clearance: 5 cm rear and right hand sides.
Suggested clearance for service access:	50 cm left hand side.

Capacity:

Trays type:	6 - 1/1 Gastronorm
Max load capacity:	30 kg

Key Information:

Door hinges:	
External dimensions, Width:	867 mm
External dimensions, Depth:	775 mm
External dimensions, Height:	808 mm
Net weight:	115 kg
Shipping weight:	132 kg
Shipping volume:	0.89 m³

ISO Certificates

ISO Standards:	ISO 9001; ISO 14001; ISO 45001; ISO 50001

The company reserves the right to make modifications to the products without prior notice. All information correct at time of printing.